Tallysman™

When precision matters.™

A Tallysman *Accutenna*®
TW2920 Wideband GPS/GLONASS/BeiDou/Galileo + L-Band Antenna

The TW2920 is an Accutenna technology antenna that covers GPS L1, GLONASS G1, BeiDou B1, Galileo E1, SBAS (WAAS, EGNOS, GAGAN, & MSAS) and the down-link L-Band (1525 – 1559MHz). The TW2920 provides superior multi-path signal rejection, a linear phase response, and tight Phase Centre Variation (PCV). This antenna is ideal for precision agriculture, autonomous vehicle tracking and guidance, and other applications where precision matters.

The TW2920 features a dual-feed wideband patch element, plus a low-loss pre-filter followed by a three stage Low Noise Amplifier (LNA) including an additional mid-section SAW. This configuration provides excellent axial ratio across the full frequency band and strong protection against high level sub-harmonic signals like LTE and near frequency signals such as WiFi.

The TW2920 has a compact, robust, magnetic mount housing with a metal base and a UV resistant, tough wide temperature range plastic radome, and is available with a variety of connectors. The housing includes a screw down option, and is available with an adhesive attachment, without a magnet,

The TW2920 is also available with an "armoured" cable. option, with the cable encased in tough corrugated conduit having a temperature range of -40 to +120C, excellent chemical resistance, stable bending, high cold impact strength, and UL94HB flammability standard compliant.

Dimensions (mm)

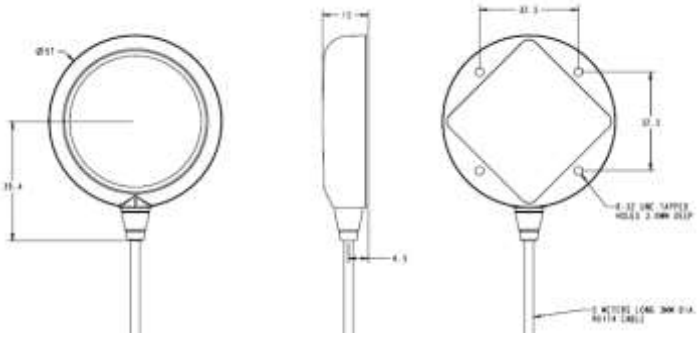

Dimensions (mm)

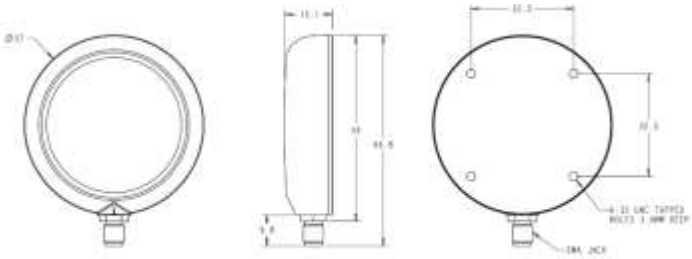

Applications

- High Accuracy & Mission Critical GNSS
- Precision Agriculture, Mining & Construction
- Military & Security

Features

- Low loss Great axial ratio: 1 typ., 3 dB max
- Low noise LNA: ≤2.5 dB (including pre-filter)
- High rejection SAW filter
- Wide voltage input range: 2.5 to 16 VDC
- IP67 weather proof housing
- Economical price

Benefits

- Excellent multipath rejection
- Increased system accuracy
- Excellent signal to noise ratio
- Great out of band signal rejection
- Ideal for harsh environments
- RoHS and REACH compliant

NavtechGPS®

Contact NavtechGPS for product details. www.NavtechGPS.com
+1-703-256-8900 • 800-628-0885 • info@navtechgps.com

TW2920 Pre-filtered GPS/GLONASS/BeiDou/Galileo + L-Band Antenna

Specifications Vcc = 3V, over full bandwidth, T=25°C

Antenna

Architecture	Dual Feed Patch, Quadrature Feeds
1 dB Bandwidth	85 MHz
Antenna Zenith Gain (with 100mm ground plane)	4.25 dBic
Axial Ratio over Bandwidth @zenith	1 dB typ,

Electrical

Architecture		Pre-filter ->LNA ->SAW filter-> 2 stage LNA
Filtered LNA Frequency Bandwidth		1510 to 1610 MHz
Polarization		RHCP
LNA Gain		32 dB min., 1510 to 1610 MHz
Gain flatness		+/- 2 dB, 1510 to 1610 MHz
Out-of-Band Rejection	<1465 MHz	>30 dB
	>1700 MHz	>55 dB
VSWR (at LNA output)		<1.5:1 typ. 1.8:1 max.
Noise Figure		≤2.5dB typ.
Supply Voltage Range (over coaxial cable)		+2.5 to 16 VDC nominal (12VDC recommended maximum)
Supply Current		18 mA typ, 25mA Q max (85°C).
ESD Circuit Protection		15 KV air discharge

Mechanicals & Environmental

Mechanical Size	57 mm dia. x 15 mm H
Cable	RG174
Operating Temp. Range	-40 to +85 °C
Enclosure	Radome: EXL9330, Base: Zamak white metal
Weight	100 g (+13g /m of cable)
Attachment Method	Magnet or permanent (pre-tapped 4 x 6-32 UNC)
Environmental	IP67, REACH, and RoHS compliant
Shock	Vertical axis: 50 G, other axes: 30 G
Vibration	3 axis, sweep = 15 min, 10 to 200 Hz sweep: 3 G

Ordering Information

TW2920 – Pre-filtered Single Band GNSS antenna: 33-2920-xx-yyy

Where xx = connector type and yyyy = cable length in mm

Please refer to the Ordering Guide (http://www.tallysman.com/wp-content/uploads/Current-Ordering-Guide.pdf) for the current and complete list of available connectors.

Tallysman Wireless Inc

36 Steacie Drive
Ottawa ON K2K 2A9 Canada
Tel 613 591 3131 Fax 613 591 3121 sales@tallysman.com

The information provided herein is intended as a guide only and is subject to change without notice. This document is not to be regarded as a guarantee of performance. Tallysman Wireless Inc. hereby disclaims any or all warranties and liabilities of any kind. © 2015 Tallysman Wireless Inc. All rights reserved.
Rev 1.2

NavtechGPS
Contact NavtechGPS for product details. www.NavtechGPS.com
+1-703-256-8900 • 800-628-0885 • info@navtechgps.com